CODICE PROV.	CICLO LAVORO	CICLO MACCHINA	VISTO

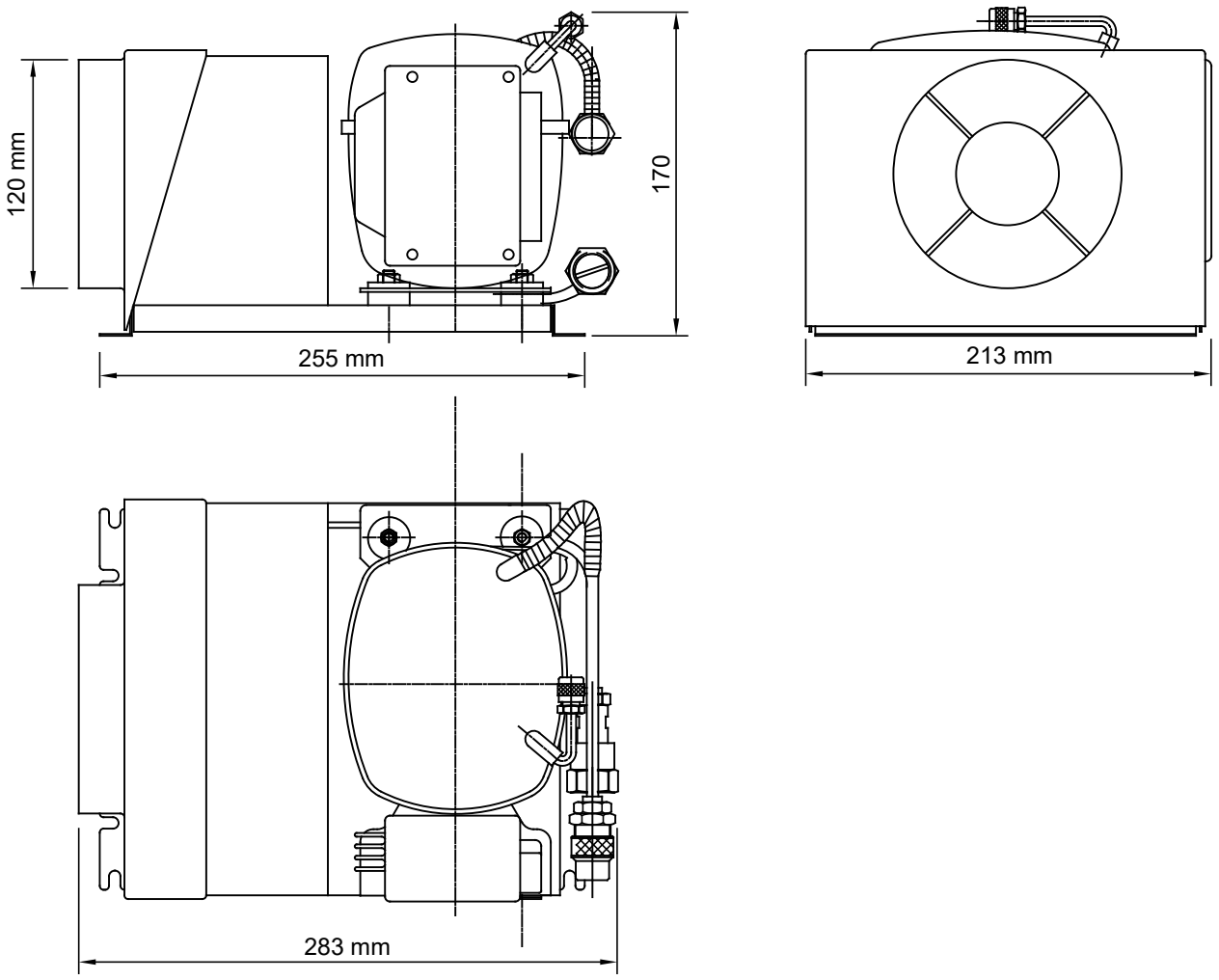

PENGUIN REFRIGERATION LIMITED		Part No: 1E52120			Page: Tav. 1 /1	03		
sales@penguinfrigo.co.uk www.penguinfrigo.co.uk		COMPRESSSOR CAPRI 50 F Air Cooled R134a				02		
						01		
Sch Contr: 03	Spessore:	General Tolerance: ISO 2768-c	Made by:	Vised:	Date:	Rev.	Data	Signature